1

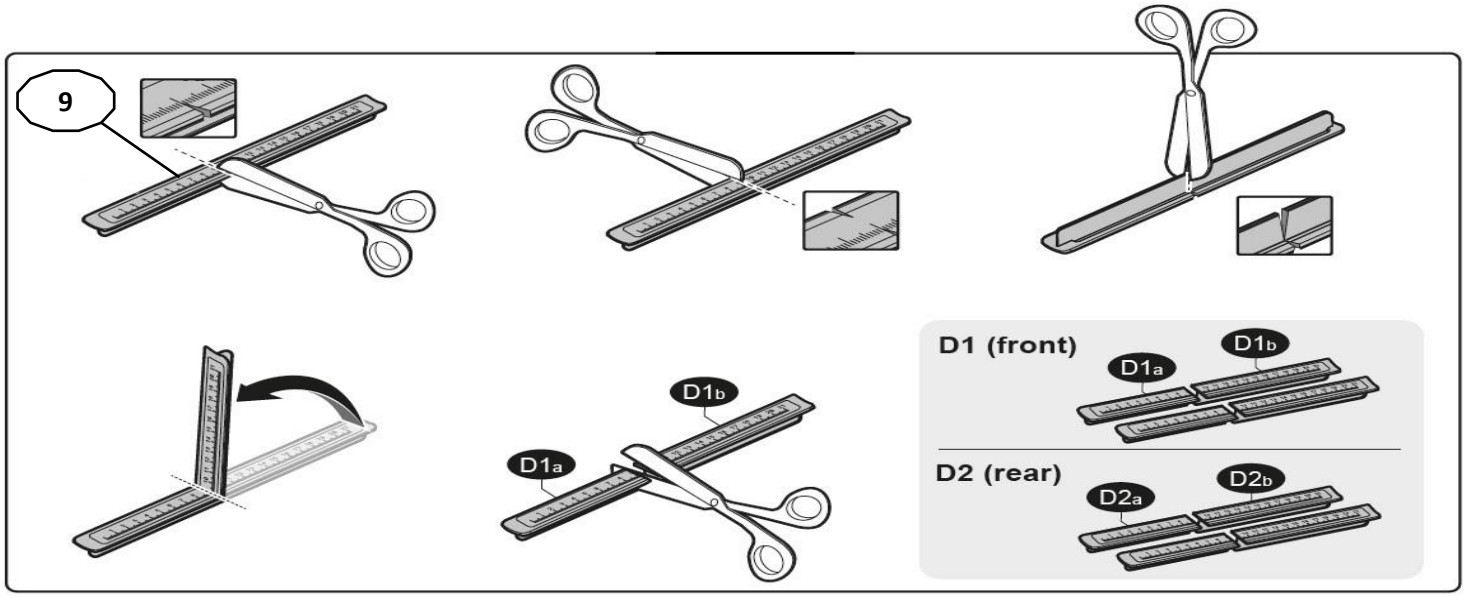

MANUFACTURER	MODEL CAR	DOORS	MODEL YEAR	D1	D2
CADILLAC	*XT5*	*5*	*17>*	*6,8*	*6,1*
SEAT	*Mii*	*5*	*12>*	*7,4*	*6,0*

2

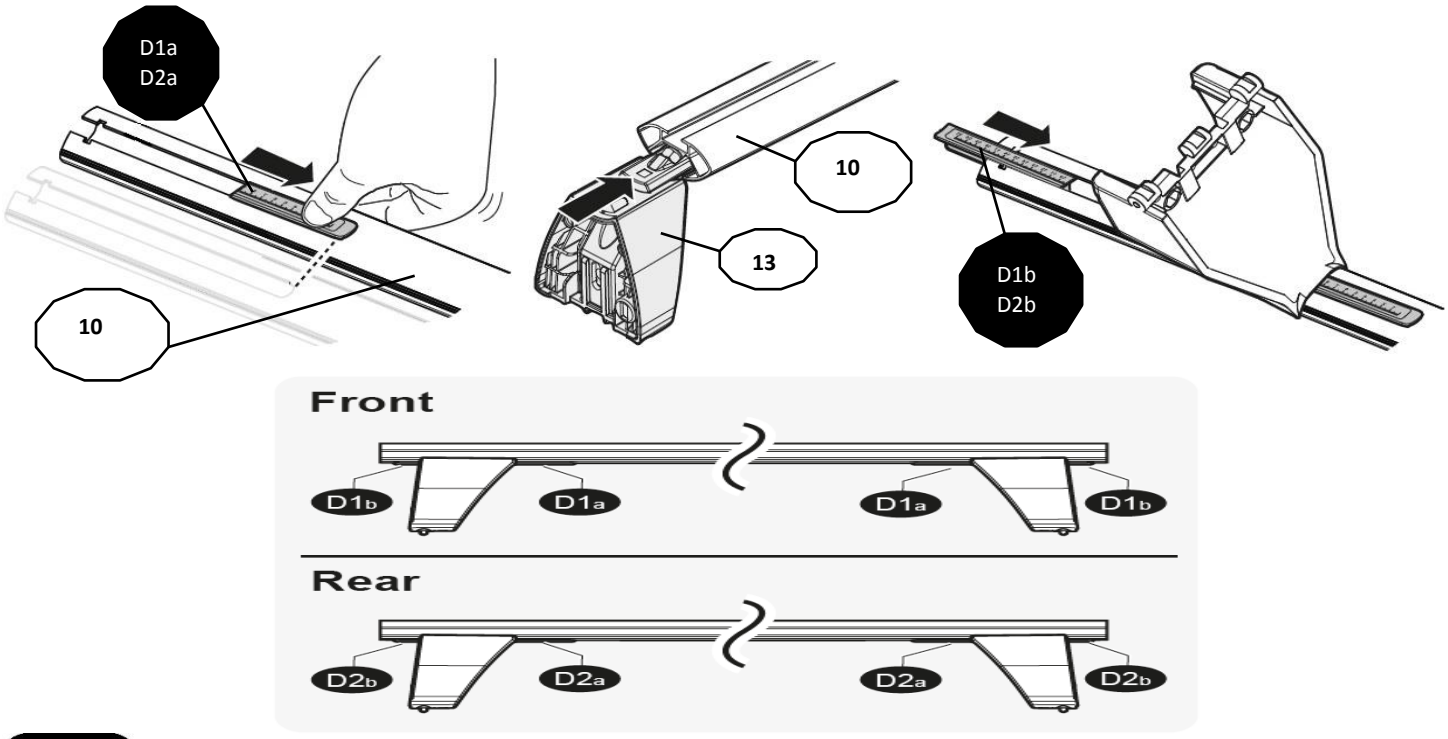

3

x4

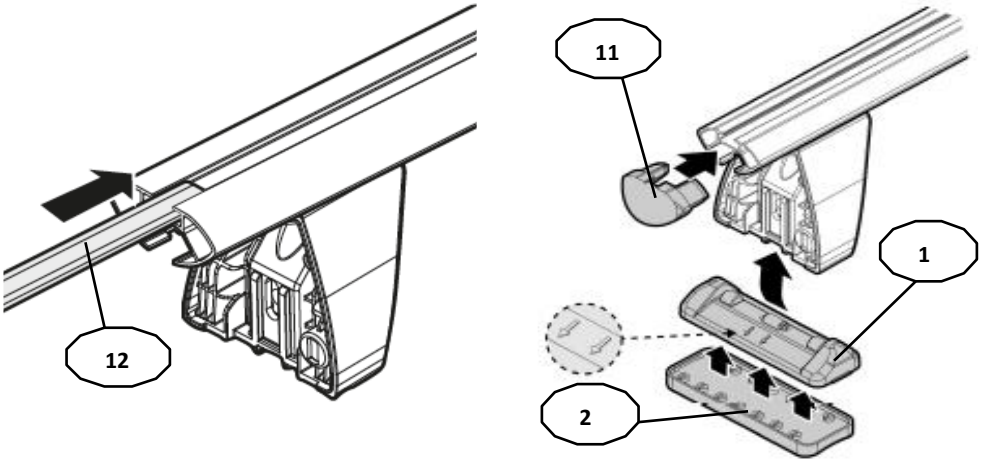

4

FRONT

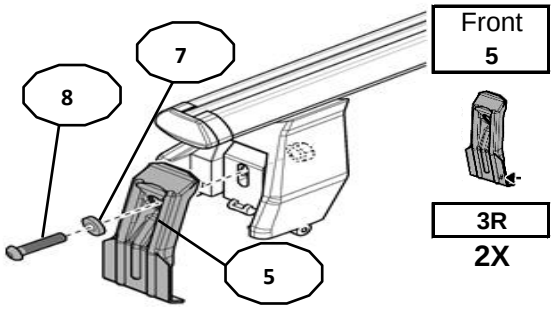

Front
5

3R
2X

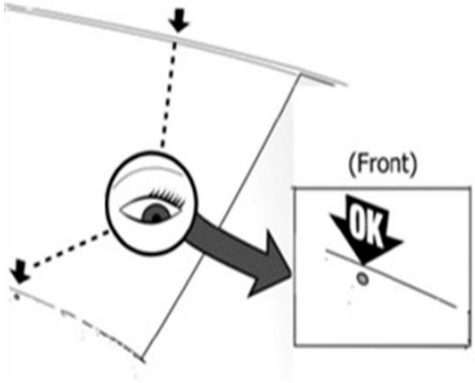

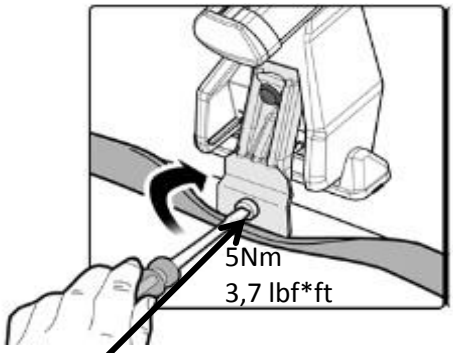

2⊕ M6x12 incluse - included

4

REAR

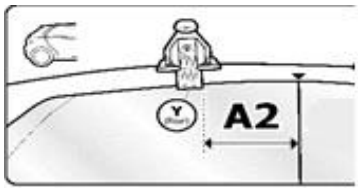

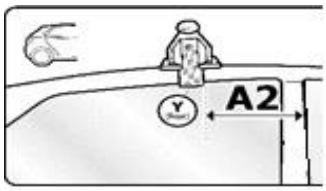

Rear
6

21R
2X

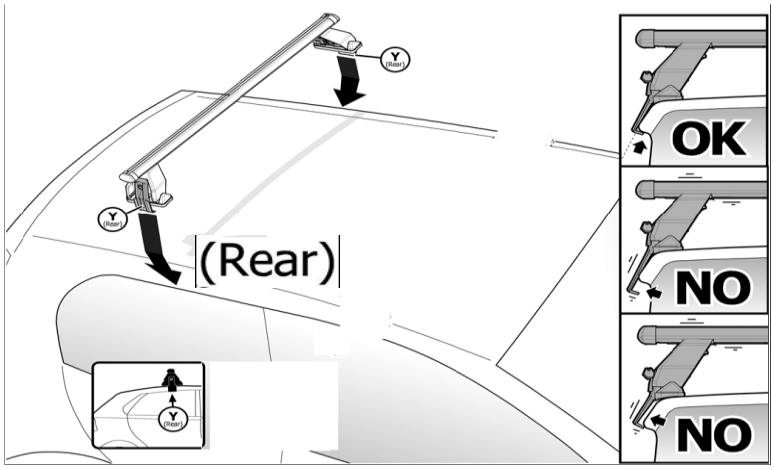

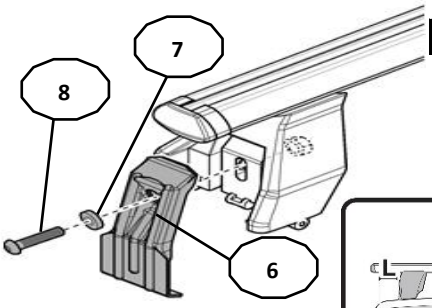

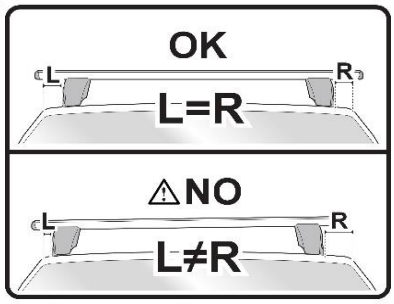

MANUFACTURER	MODEL CAR	DOORS	MODEL YEAR	A1 cm	A2 cm	A1 in	A2 in
CADILLAC	*XT5*	*5*	*17>*	*17*	*42*	*6,7*	*16,5*
SEAT	*Mii*	*5*	*12>*	*X*	*43*	*X*	*16,9*

X = predisposizione originale /original arrangement